Cambridge Assessment International Education
Cambridge International General Certificate of Secondary Education

CANDIDATE NAME	
CENTRE NUMBER	
CANDIDATE NUMBER	

PHYSICS **0625/43**

Paper 4 Theory (Extended) **October/November 2019**

1 hour 15 minutes

Candidates answer on the Question Paper.

No Additional Materials are required.

READ THESE INSTRUCTIONS FIRST

Write your centre number, candidate number and name on all the work you hand in.
Write in dark blue or black pen.
You may use an HB pencil for any diagrams or graphs.
Do not use staples, paper clips, glue or correction fluid.
DO **NOT** WRITE IN ANY BARCODES.

Answer **all** questions.
Electronic calculators may be used.
You may lose marks if you do not show your working or if you do not use appropriate units.
Take the weight of 1.0 kg to be 10 N (acceleration of free fall = 10 m/s^2).

At the end of the examination, fasten all your work securely together.
The number of marks is given in brackets [ ] at the end of each question or part question.

This syllabus is regulated for use in England, Wales and Northern Ireland as a Cambridge International Level 1/Level 2 Certificate.

This document consists of **15** printed pages and **1** blank page.

DC (PQ/SG) 174869/4
© UCLES 2019

Cambridge Assessment International Education

[Turn over

www.root19.com +91 - 9969 353 391

1 Fig. 1.1 is the top view of a tank in an aquarium. The tank is filled with salt water.

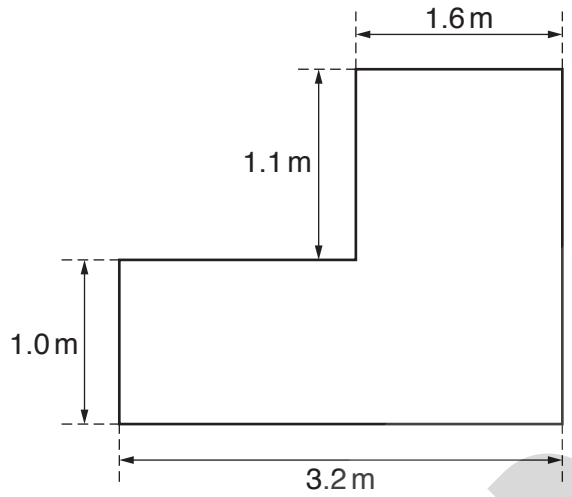

Fig. 1.1 (not to scale)

The depth of the water in the tank is 2.0 m.

(a) Calculate the volume of the water in the tank.

volume = ... [3]

(b) The density of the water in the tank is 1.1×10^3 kg / m^3.

Calculate the mass of the water in the tank.

mass = ... [2]

© UCLES 2019
www.root19.com

+91 - 9969 353 391

(c) Calculate the pressure due to the water at a level of 0.80 m above the base of the tank.

pressure = ... [3]

[Total: 8]

© UCLES 2019
www.root19.com

+91 - 9969 353 301

2 **(a)** **(i)** State, in words, the equation that defines the *moment of a force*.

.....

..... [2]

(ii) State what is meant by the *moment of a force*.

..... [1]

(iii) *Force* is a vector quantity.

Explain what is meant by the term *vector*.

.....

..... [1]

(b) Fig. 2.1 shows a tower crane used to lift a load on a construction site.

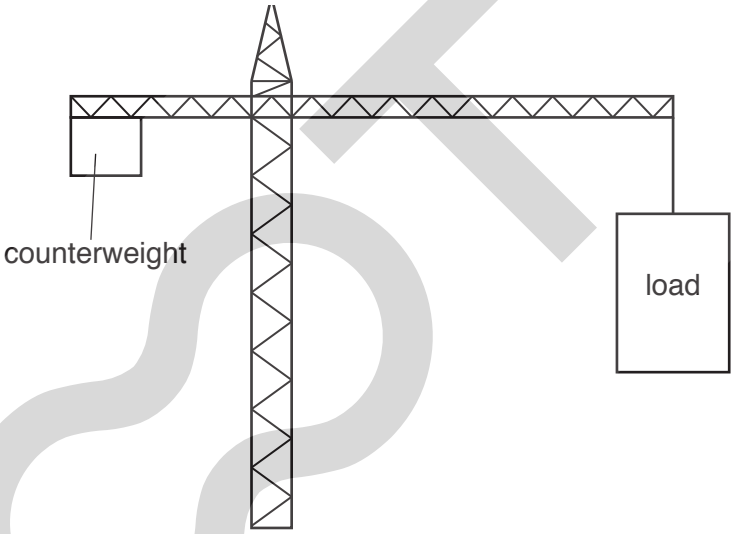

Fig. 2.1

Explain how the counterweight prevents the crane from toppling over.

.....

.....

..... [2]

[Total: 6]

www.root19.com +91 - 9969 353 391

3 **(a)** Fig. 3.1 shows a waterfall.

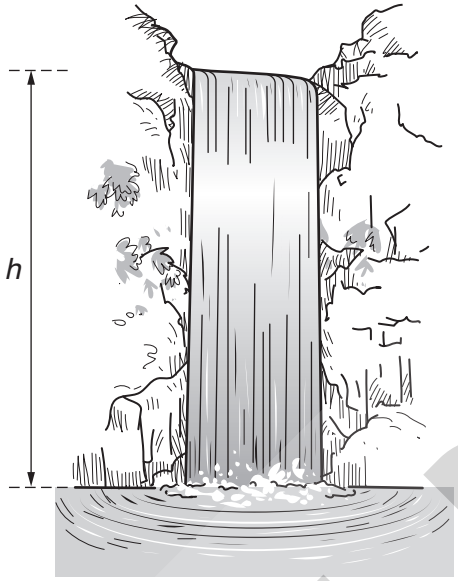

Fig. 3.1

(i) Describe the main energy transfer which is taking place as the water falls.

..... [2]

(ii) The speed of the water as it hits the bottom is 21 m/s.

Calculate the height *h* of the waterfall.

height = ... [3]

(iii) State and explain any assumption you made in **(ii)**.

..... [1]

(b) The Sun is the source of energy for most energy resources used to produce electricity.

State **two** energy resources that have another source for their energy.

1. .....

2. .....
[2]

[Total: 8]

www.root19.com +91 - 9969 353 301

4 Solids have a fixed shape. Liquids adapt to the shape of their container. Gases fill their container.

Explain in terms of forces between molecules and arrangement of molecules, why solids, liquids and gases have these properties.

Solids .....

.....

.....

Liquids .....

.....

.....

Gases .....

.....

.....

[6]

[Total: 6]

© UCLES 2019
www.root19.com

+91 - 9969 353 391

5 An electric kettle contains water at a temperature of 19 °C. The kettle has a power rating of 3.0 kW and is switched on for 3.5 minutes.

(a) Calculate the energy supplied to the kettle by the electricity supply.

electrical energy = ... [3]

(b) At 3.5 minutes, the temperature of the water reaches 100 °C. The volume of the water in the kettle is 1700 cm^3 and its density is 1.0 g/cm^3. The specific heat capacity of water is 4200 J/(kg °C).

Calculate the thermal energy gained by the water.

thermal energy = ... [5]

(c) Calculate the efficiency of the kettle.

efficiency = ... [2]

[Total: 10]

© UCLES 2019
www.root19.com

+91 - 9969 353 301

6 Fig. 6.1 represents wavefronts of a sound wave travelling in air from left to right.

Fig. 6.1

(a) State the name given to the:

(i) region around A in the diagram ..... [1]

(ii) region around B in the diagram. ..... [1]

(b) On Fig. 6.1, draw a double-headed arrow to show **one** wavelength. [1]

(c) The loudness of the sound increases at the same pitch.

State and explain any change there would be in the pattern of wavefronts shown in Fig. 6.1.

.....

.....

.....

..... [3]

(d) The wave passes into water.

State and explain any change in the pattern of wavefronts shown in Fig. 6.1.

.....

.....

.....

..... [3]

[Total: 9]

© UCLES 2019
www.root19.com

+91 - 9969 353 391

7 **(a)** Fig. 7.1 shows the position of a converging lens, its principal axis and an object O.

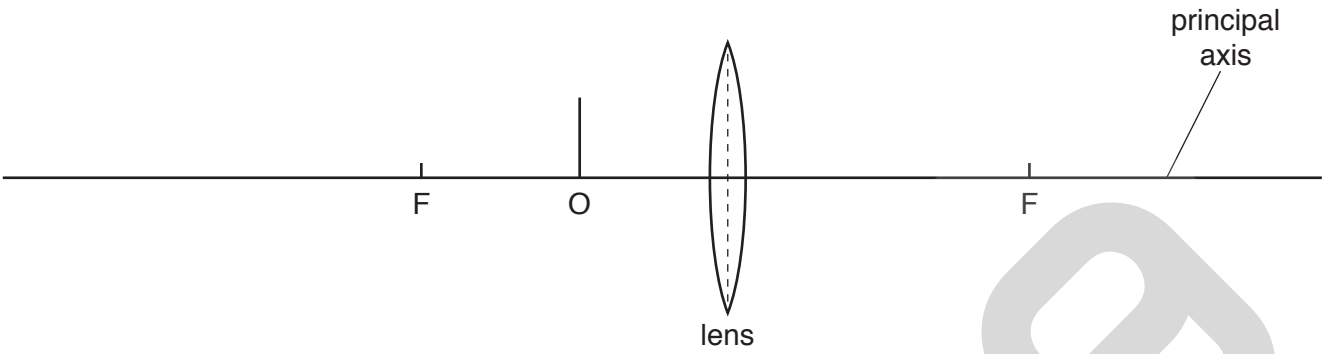

Fig. 7.1

Each principal focus of the lens is labelled F.

On Fig. 7.1, draw a ray diagram to locate the position of the image formed by the lens.

Label the image I. [3]

(b) Describe the nature of the image I.

..... [2]

(c) Images formed by lenses sometimes have coloured edges.

Suggest a reason for this.

.....

..... [1]

[Total: 6]

www.root19.com +91 - 9969 353 301

8 **(a)** Fig. 8.1 shows a negatively charged conducting sphere.

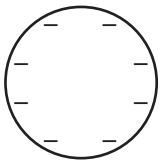

Fig. 8.1

On Fig. 8.1, draw the electric field pattern around the sphere. [2]

(b) The current in an electrical device is 0.21 A.

Calculate the charge that flows during a 75 s period of time.

charge = ... [2]

[Total: 4]

www.root19.com +91 - 9969 353 391

9 Fig. 9.1 shows a circuit containing an LED and two resistors in parallel, each of resistance *R*.

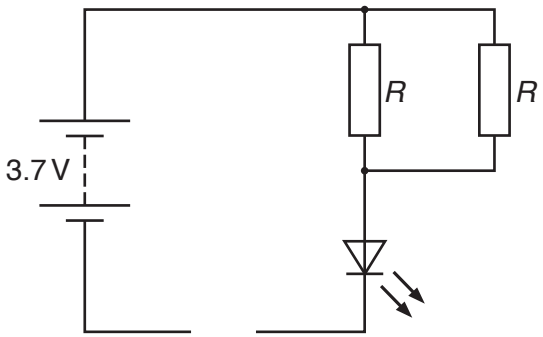

Fig. 9.1

The normal operating voltage of the LED is 2.1 V and the normal current is 0.19 A.

(a) **(i)** The potential difference (p.d.) across the LED is measured with a voltmeter.

On Fig. 9.1, draw the symbol for this voltmeter connected to the circuit. [1]

(ii) The current in the LED is measured with an ammeter.

On Fig. 9.1, draw the symbol for this ammeter connected to the circuit. [1]

(b) Calculate the value of *R* when the LED is operating normally.

R = ... [5]

[Total: 7]

© UCLES 2019
www.root19.com

+91 - 9969 353 301

10 **(a)** A magnet and a coil are attached separately to a door and a door frame as shown in Fig. 10.1.

The purpose of the arrangement is to activate a circuit connected to an LED indicator when the door is opening or closing. This will provide a visual indication that the door is being used.

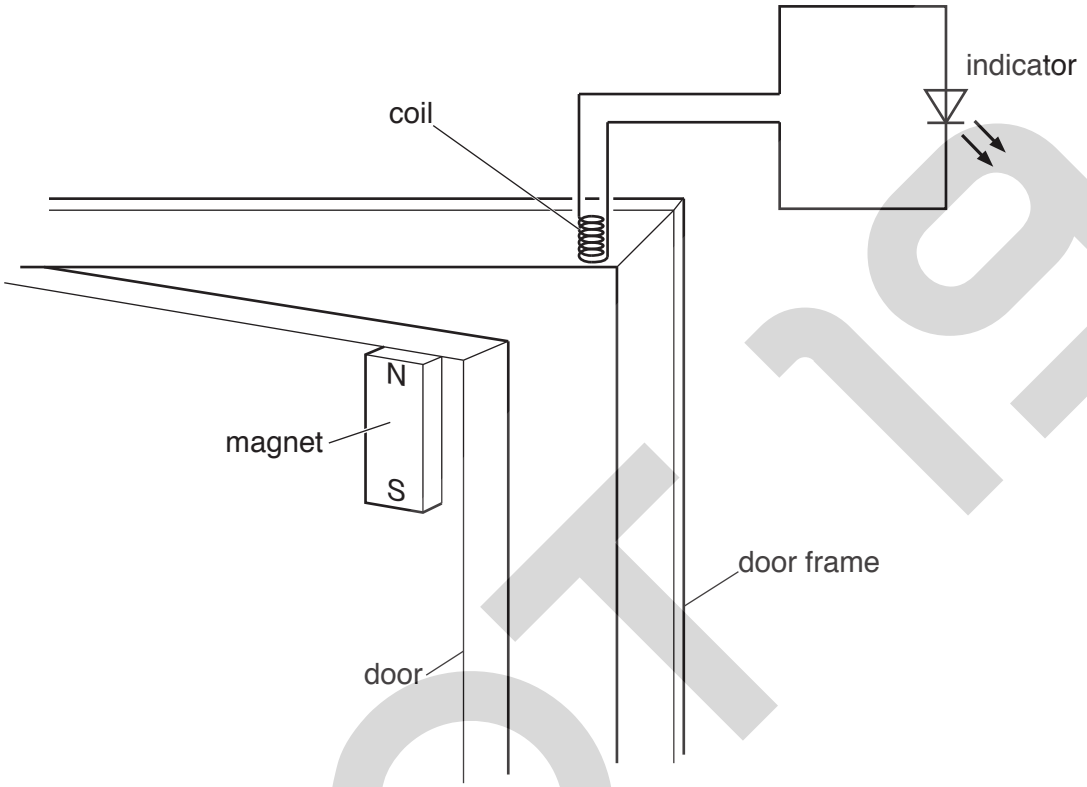

Fig. 10.1

Initially, the door is closed and then it is opened.

(i) Explain why the indicator comes on and then goes off when the door is opened.

.....

.....

..... [2]

(ii) The door shuts. The indicator comes on more brightly but for a shorter time than it did in **(i)**. Suggest and explain why this happens.

.....

.....

..... [2]

www.root19.com +91 - 9969 353 391

(b) A circuit breaker is recommended for use with an electric lawnmower.

State **two** reasons for this recommendation.

reason 1 .....

.....

reason 2 .....

.....
[2]

[Total: 6]

© UCLES 2019
www.root19.com

+91 - 9969 353 301

11 **(a)** The circles shown in Fig. 11.1 represent three gold nuclei. Three α-particles are approaching the gold nuclei.

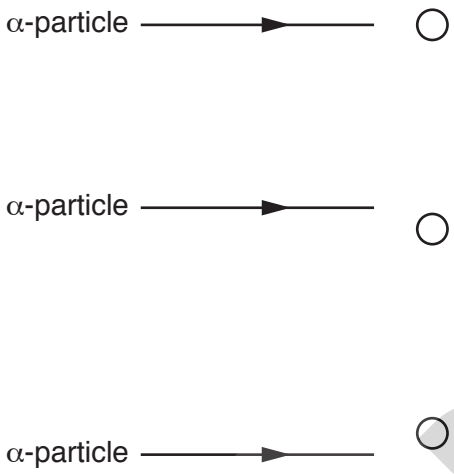

Fig. 11.1

On Fig. 11.1, complete the path of each α-particle. [3]

(b) A detector of radioactivity in a laboratory indicates an average of 16 counts/min when no radioactive samples are present. A radioactive sample of half-life 1.5 days is placed close to the detector, which indicates a count rate of 208 counts/min.

Calculate the count rate that is indicated 6 days later.

count rate = ... counts/min [4]

www.root19.com +91 - 9969 353 391

(c) The waste from nuclear power stations includes the isotopes technetium-99, tin-126 and selenium-79. These isotopes are radioactive with half-lives of many thousands of years.

State **three** economic and environmental consequences of producing this waste.

.....

.....

.....

.....

.....

.....

..... [3]

[Total: 10]

© UCLES 2019
www.root19.com

+91 - 9969 353 391

BLANK PAGE

Permission to reproduce items where third-party owned material protected by copyright is included has been sought and cleared where possible. Every reasonable effort has been made by the publisher (UCLES) to trace copyright holders, but if any items requiring clearance have unwittingly been included, the publisher will be pleased to make amends at the earliest possible opportunity.

To avoid the issue of disclosure of answer-related information to candidates, all copyright acknowledgements are reproduced online in the Cambridge Assessment International Education Copyright Acknowledgements Booklet. This is produced for each series of examinations and is freely available to download at www.cambridgeinternational.org after the live examination series.

Cambridge Assessment International Education is part of the Cambridge Assessment Group. Cambridge Assessment is the brand name of the University of Cambridge Local Examinations Syndicate (UCLES), which itself is a department of the University of Cambridge.

www.root19.com +91 - 9969 353 391